UNITTOOL

MOUNTING ACCESSORIES & ENGINEERING DATA

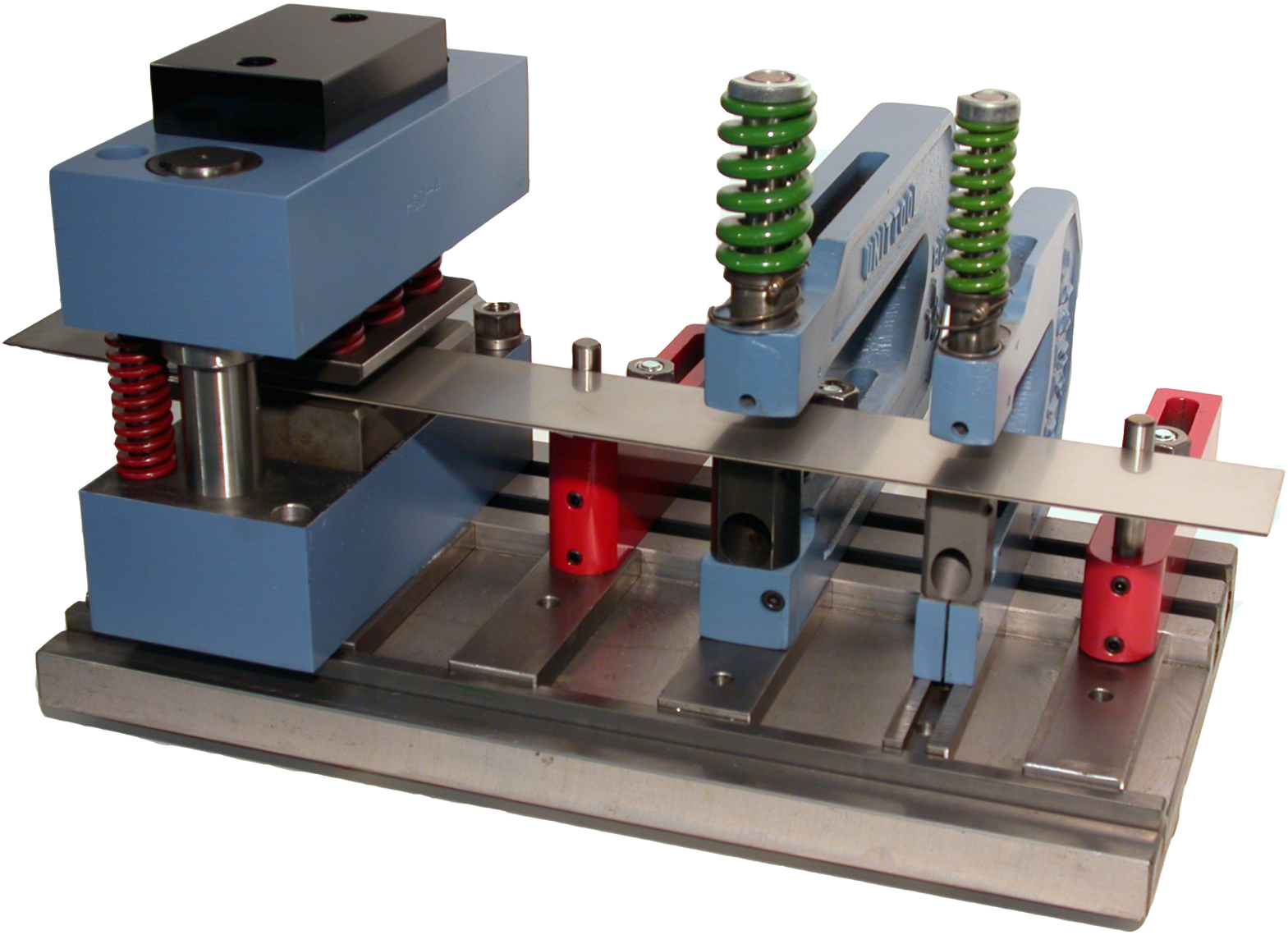

UNITTOOL PUNCH AND DIE COMPANY INC.

311 5th Street NW Clear Lake, WI 54005 | Phone: 1-716-873-8453 | Email: Info@Unittool.com

UNITTOOL
MOUNTING ACCESSORIES & ENGINEERING DATA

Unittool and Unipunch brands have combined and merged product offerings.

TABLE OF CONTENTS

MOUNTING ACCESORIES ..... PAGES 3-6

SHAPED HOLE PUNCHES, DIES, & GUIDES ..... PAGE 7

PRESS BRAKE MOUNTING INFORMATION ..... PAGE 8

SCREWS DATA ..... PAGE 9

GENERAL INFORMATION ..... PAGES 10-12

CONVERSION CHART ..... PAGES 13-14

TONAGE CHART ..... PAGE 15

DISTANCE MEASUREMENTS ..... PAGES 16-17

MOUNTING ACCESORIES

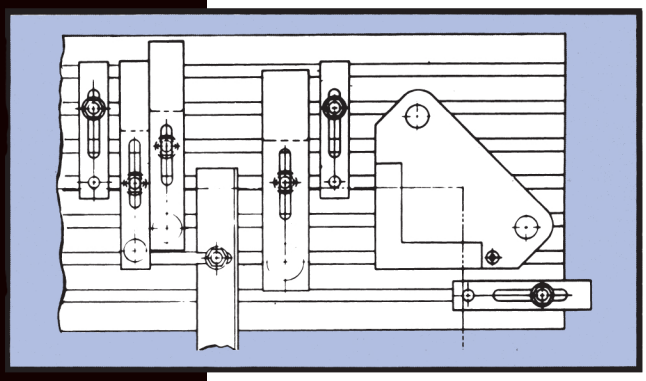

Ram striker plate

RAM STRIKER PLATE PROVIDES ADDITIONAL STRIKING AREA FOR PRESS BRAKE OPERATION

Manufactured in 4, 5 and 6 foot lengths. When multiple lengths are used–ask for squared ends. (Price on application.)

CAT. NO.	A	B	WT.PER FT.
RP-802	3/4	6	16
RP-803	3/4	5	14
RP-804	1/2	5	9
RP-805	2	4	29

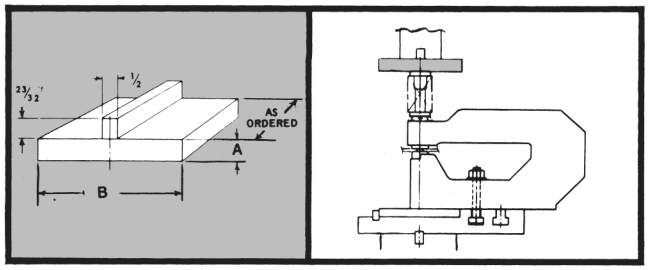

Bedrail

CAT. NO. BR-800
WEIGHT 36# PER FT.

FOR USE WITH STRIP TEMPLATE OR BEDRAIL SPACERS.

Any template width up to 6" may be used. For template wider than 4 3/4", remove 3/8" wide bedrail space bar. Bedrails are manufactured in 4, 6, 8, 10 & 12 foot lengths. When multiple lengths are used, ask for ends to be machined for butting. (Price on application.) "C" Frame units with 8" depth or greater are recommended for use with bedrail.

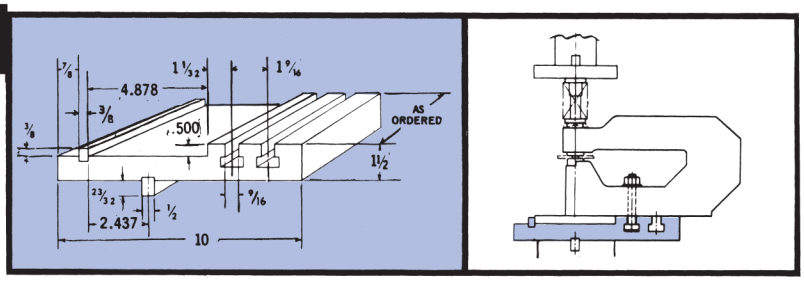

Bedrail

CAT. NO. BR-801
WEIGHT 63# PER FT.

FOR USE WITH FORMING DIE, TEMPLATE OR BEDRAIL SPACERS.

Eliminates need to remove bedrail for forming operations. Any template up to 6" may be used. For template wider than 4 3/4", remove 3/8" wide bedrail spacer bar.
Manufactured in 4, 6, 8, 10 & 12 foot lengths. When multiple lengths are used, ask for ends to be machines for butting. (Price on application.) "C" Frame units with 8" or greater are recommended for use with bedrail.

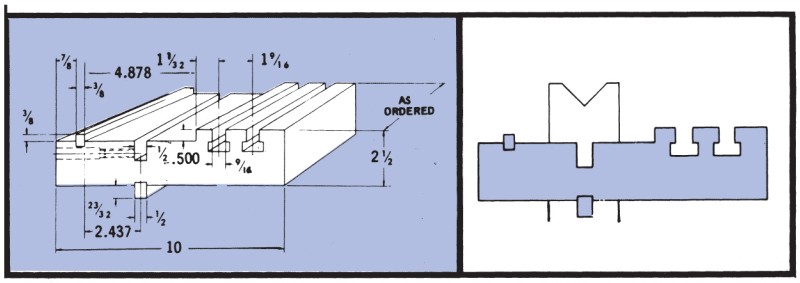

Bedrail spacers

CAT. NO.	WIDTH	FOR USE WITH
BRS-807	1"	Heavy & Medium Duty Units up to 1 1/4" width.
BRS-808	1 1/2"	Heavy & Medium Duty Units from 1 1/4" to 2" width.
BRS-809	2"	Heavy & Medium Duty Units from 2" to 3" width.
BRS-810	3 1/2"	Heavy & Medium Duty Units from 3" to 3 1/2" width.
BRS-813	5"	Heavy & Medium Duty Units from 3 1/2" to 5 3/4" width.
BRS-817	8"	Heavy & Medium Duty Units from 5 3/4" to 8" width.
BRS-811	3 1/2"	Adjustable End Stop - Cat. No. 828 & 829.
BRS-812	8"	All Series 200 Corner & Edge Notching Units.
BRS-815	4 1/2"	All Series 100 - 3x3 & 5x5 Corner Notching Units.

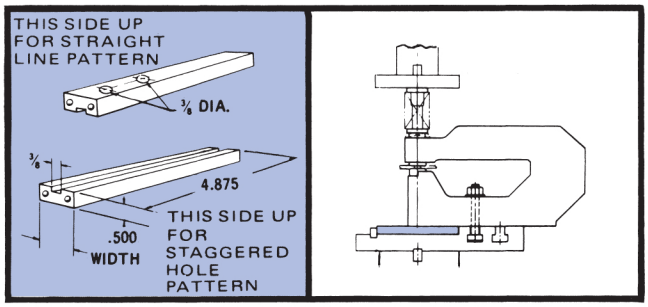

For convenient mounting of units on bed rail when template is not used. Spacers can be adjusted along the rail to suit any particular hole pattern.

Adjustable Work stop

A = 1¼" CAT. NO. WS-818
A = 1" CAT. NO. WS-819

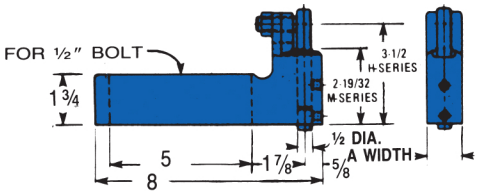

Adjustable work stop sits on plate for template or tee slotted plates. The vertical pin can be removed and the screw can be adjusted for variations in stock dimensions

Dowel pin stop

CAT. NO. WS-820

For popular use for fixed stop on mounting template

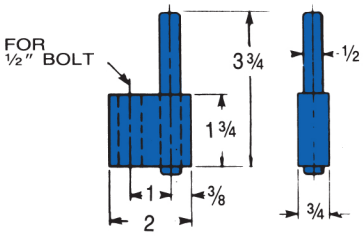

Disappearing pin stop

FOR "H" SERIES CAT. NO. HWS-822
FOR "M" SERIES CAT. NO. MWS-823

For progressive piercing when using edge of sheet for gauging.

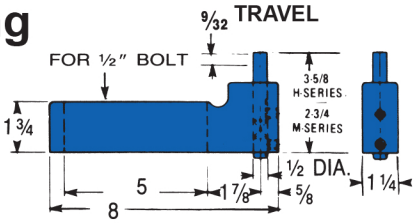

Fixed pick-up pin

FOR "H" SERIES CAT. NO. HWS-826
FOR "M" SERIES CAT. NO. MWS-827

For locating from holes previously punched when performing pass along operations.

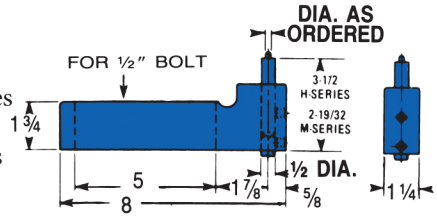

Feed rail and adjustable stop

FOR "H" SERIES A = 3½ CAT. NO. HFR-830
FOR "M" SERIES A = 2¹⁹/₃₂ CAT. NO. MFR-831

Feed Rail Only

FOR "H" SERIES A = 3½ CAT. NO. HFR-832
FOR "M" SERIES A = 2¹⁹/₃₂ CAT. NO. MFR-833

Feed rails are used to support work piece over large spans between punching units.

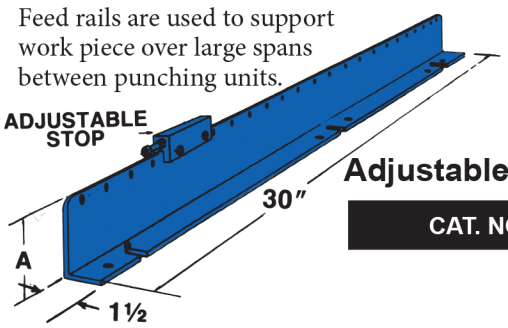

Adjustable Stop Only

CAT. NO. FRS-834

General purpose stop

CAT. NO. WS-821

For use on templates or Tee slotted plates.

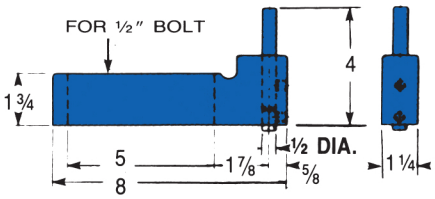

Spring loaded pick-up pin

FOR "H" SERIES CAT. NO. HWS-824
FOR "M" SERIES CAT. NO. MWS-825

For relocating from previous pierced hole.

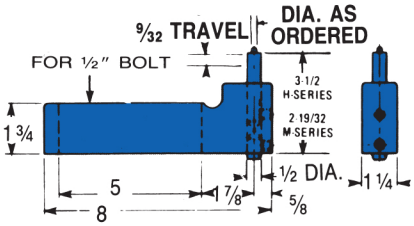

Adjustable stop

FOR "H" SERIES CAT. NO. HWS-824
FOR "M" SERIES CAT. NO. MWS-825

For a positive stop location with adjustment feature to compensate for variations in size of work piece.

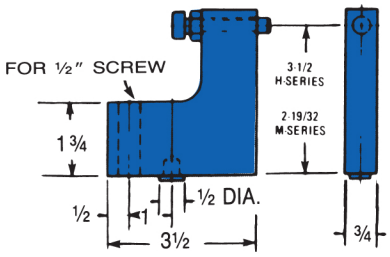

Disc edge stop

CAT. NO. WS-873

For end gauging the work piece within the 'C' frame holder.

Disc only:
Cat. No. Ws-874

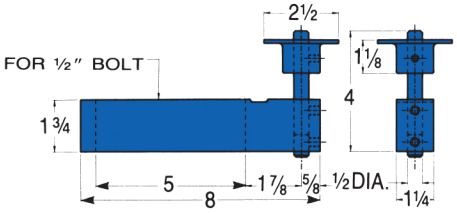

Bolt and washer set

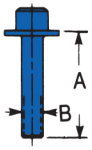

A = 3"-B = ½-13 CAT. NO. BW 863 –FOR MODEL H5¼ & H8 UNITS
A = 2¼"-B = ½-13 CAT. NO. BW 842 – FOR MODEL M & H UNITS EXCEPT H-5¾, H-8, HH-5½ & M-¾
A = 2¼"-B = 5/16-18 CAT. NO. BW 864 – FOR MODEL M¾ UNIT

For template mounting

Tee bolt, nut and washer set

A = 3½"-B = ½ CAT. NO. NBW 865 – FOR MODEL H5¾ & H8 UNITS
A = 3"-B = ½ CAT. NO. NBW 843 – FOR MODEL M & H UNITS EXCEPT H-5¾, H-8, HH-5½ & M-¾
A = 2½"-B = 5/16" CAT. NO. NBW 866 – FOR MODEL M-¾ UNITS
A = 3½"-B = ½" CAT. NO. NBW 872 SQ. HEAD TEE BOLT SET

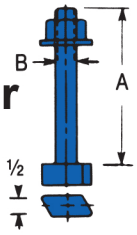

The base of the tee bolt is designed so it can be dropped into the tee slot at any location. When the nut is tightened, the base of the bolt automatically swings into place for tightening. **NBW-872** square head tee bolt must slide in from end of the tee slot.

Tee slotted plate

Unittool's tee slotted plates are used for mounting units in press brakes or stamping presses. When multiple lengths are used – ask for ends to be "squared." Price on application.

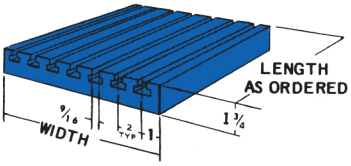

Width	No. of Slots	LENGTH AND CATALOG NO.								Approx. Pounds per Foot of Length
		18	24	30	36	48	60	72	144	
12	6	TSP-1218	TSP-1224	TSP-1230	TSP-1236	TSP-1248	TSP-1260	TSP-1272	TSP-12144	57
18	9	TSP-1818	TSP-1824	TSP-1830	TSP-1836	TSP-1848	TSP-1860	TSP-1872	TSP-18144	85
24	12	-	TSP-2424	TSP-2430	TSP-2436	TSP-2448	TSP-2460	TSP-2472	-	113
30	15	-	-	TSP-3030	TSP-3036	TSP-3048	TSP-3060	TSP-3072	-	142
36	18	-	-	-	TSP-3636	TSP-3648	TSP-3660	TSP-3672	-	170

Punch and die shims 1/16" THICKNESS

Punch and die life can be extended greatly by use of shims to bring parts up to "new" length. (For punch and die length when new, see charts above). Punch shims can also be used to lengthen punches in event it is desirable to stagger punching load.

	CATALOG NUMBER	FOR MODEL	PUNCH NUMBER
PUNCH	PS-845	M 3/4	MP 072
	PS 846	M 1-1/4	MP 122
	PS 847	M 1-3/4	MP 172
	PS 848	M 2-1/4	MP 222
	PS 849	M 3	MP 302-1
	(FOR PUNCH TIP SIZE UNDER 1.125)		
	PS 850	M 3	MP 302
	(FOR PUNCH TIP SIZE OVER 1.125)		
	PS 851	M 5 & H 5-3/4	MP 502 ABC&D
	PS 852	M 2-1/2	HP 252
	PS 853	H 3-1/2	HP 352
	CATALOG NUMBER	**FOR MODEL**	**DIE NUMBER**
DIE	DS 854	M 3/4	MD 073
	DS 849	M 1-1/4	MD 123
	DS 848	M 1-3/4	MD 173
	DS 855	M 2-1/4	MD 223
	DS 856	M 3	HD 303
	DS 857	M 5 & H 5-3/4	HD 603
	DS 858	H 1 & H 1-1/4	HD 123
	DS 859	H 1-1/2	HD 153
	DS 860	H 2	HD 203
	DS 861	H 2-1/2	HD 253
	DS 862	H 3-1/2	HD 253

("M" series only).

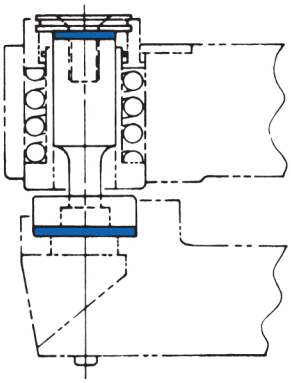

Locator pins

Cat. No.	A	For Use with model
LP 835	.312	L - series, M3/4
LP 836	.375	M 1 1/4
LP 837	.4375	H-1, HP 1, HA 1 H 1 1/4, HP 1 1/4, HA 1 1/4
LP 838	.500	M-1 3/4
LP 839	.625	H 1 1/2 - HP 1 1/2 - HA 1 1/2
LP 840	.875	H 2, HP 2, HA 2, H
LP 841	1.000	M 2 1/4

Locator pins are used to set up units on a tee slotter plate or bolster. A sheet metal template is placed on the die section of the unit. The locator is dropped down through the guide to pick up the hole in the template. The unit is then bolted in position. The locator pin is removed and the punch is replaced in the guide.

Grind life

Punch and die grind life must not exceed the dimension shown. The stripper springs and holder can be severely damaged if punches and dies are used without shims beyond the recommended grind life. See below for shim information.

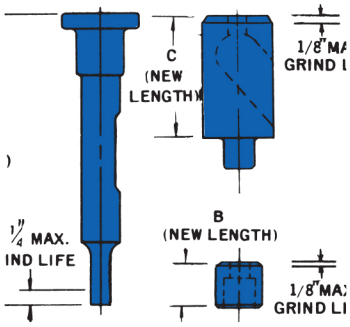

HEAVY-DUTY

MODEL NO.	A	B	C
H1 thru H2	4 7/8	3/4	–
HP-1 thru HP-2	4 7/8	–	2 1/8
HA-1 thru HA-2	4 7/8	3/4	–
H-2 1/2	2 13/32	3/4	–
HP-2 1/2	2 13/32	–	2 1/8
H-3, H-3 1/2	2 13/32	3/4	–
H-5 3/4	1 7/8	27/32	–
H-8	1 21/32	1 1/4	–

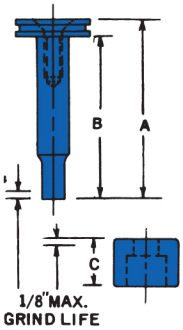

MEDIUM DUTY

MODEL	A Punch Ass'y Length with Head	B Punch Length w/o Head	C Die Height
M-3/4	2.906	2.687	.500
M-1	2.906	2.625	.380
M-1 1/4, 1 3/4, 2 1/4	2.906	2.625	.593
M2 1/2, M-3	2.906	2.656	.750
M-4	2.906	2.343	.750
M-5	2.906	1.875	.844
M-8	2.906	1.000	1.250

Magnetic work stop

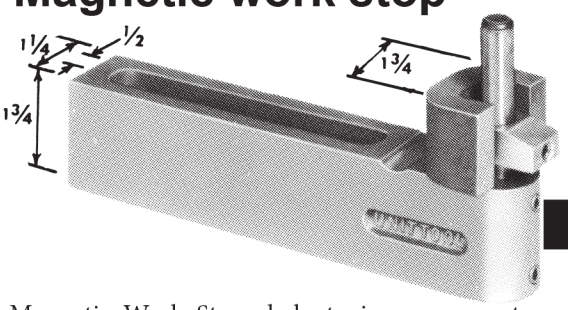

FULLY ADJUSTABLE RADIALLY & VERTICALLY

CAT. NO. MWS 868

Magnetic Work Stops help to insure accurate gauging by eliminating "bounce back." Also eliminates the need for the operator to hold work piece against stop during press cycle. Recommended by OSHA.

SUITABLE FOR 3-1/2" DIE HEIGHT (Heavy-Duty) or 2-19/32 DIE HEIGHT (Medium Duty).

Magnetic Feed Rails

Catalog No.	Description	
HFRM-870	Magnetic Feed Rail	(Heavy Duty)
MFRM-871	Magnetic Feed Rail	(Medium Duty)

Magnetic work supporting feed rails are now available for use with heavy and medium duty punching and notching systems. This rail virtually eliminates template location and set up time. To release the magnetic force simply lift the magnetic feed rail away from the template or tee slot plate.

Compensator caps for H1, H1¹/₄, H1¹/₂ & H2 units.

Compensator Caps are used to stagger punching load when available press tonnage is marginal. The caps alter the punch assembly length and cause the punch tips to enter the material at different intervals, thereby reducing the required tonnage accordingly. The disadvantage of using compensator caps is that it overworks the stripping springs because of additional punch assembly length. Caution must be exercised to prevent "bottoming." New or full length punches and dies are recommended when using compensator caps in order to keep the press shut height at a maximum.

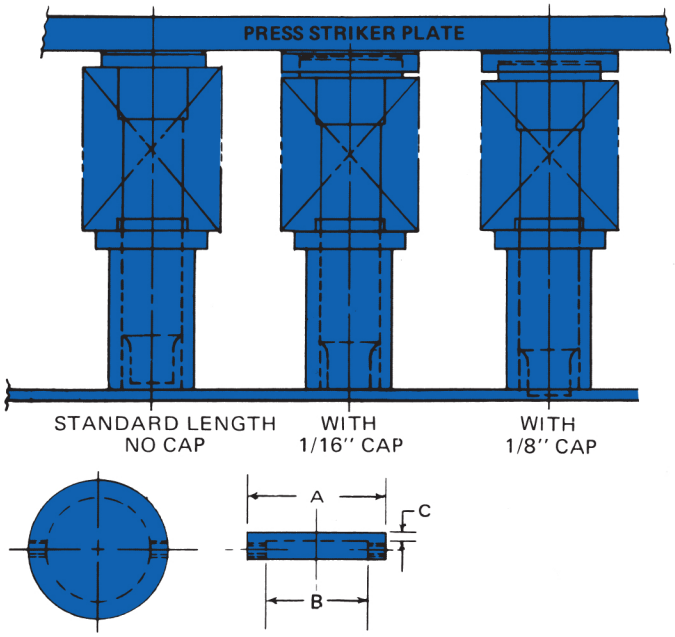

MODEL	A	B	C	PART NO.
H1, H1¹/₄	1-1/2	1-1/32	1/16	CC-125-062
			1/8	CC-125-125
H1¹/₂	1-3/4	1-9/32	1/16	CC-150-062
			1/8	CC-150-125
H2	2	1-17/31	1/16	CC-200-062
			1/8	CC-200-125

CHART TO SHOW HOW DIFFERENT COMBINATIONS CAN BE USED:

Material Thickness To Be Punched	Compensator Cap Thickness	Approx. % of Full Tonnage Reqd	Number of Punches Capped
1/16	1/16	50	1/2 (50%)
1/8	1/16	50	1/2 (50%)
1/8	1/8	50	1/2 (50%)
1/8	1/16 & 1/8	33-1/3	2/3 (66.6%) 1/3 w 1/16" Cap 1/3 w 1/8" Cap
3/16	1/16	50	1/2 (50%)
3/16	1/8	50	1/2 (50%)
3/16	1/16 & 1/8	33-1/3	2/3 (66.6%) 1/3 w 1/16" Cap 1/3 w 1/8" Cap
1/4*	1/8	50	1/2 (50%)
1/4*	1/16 & 1/8	40	2/3 (66.6%) 1/3 w 1/16" Cap 1/3 w 1/8" Cap

* Use extreme caution on 1/4" material

SHAPED HOLE PUNCHES, DIES & GUIDES

Standard Shapes

Standard shapes are keyed for both parallel and 90 degree position to the center line of the holder.

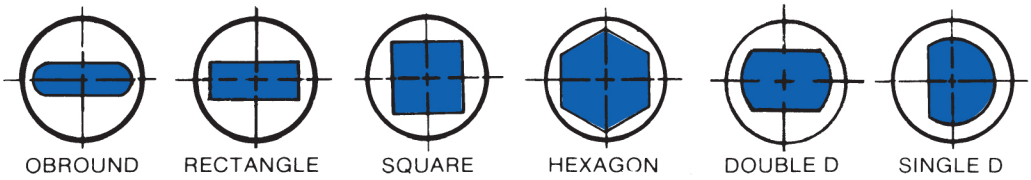

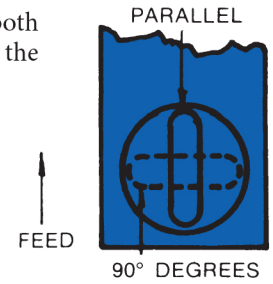

Semi standard and special shapes

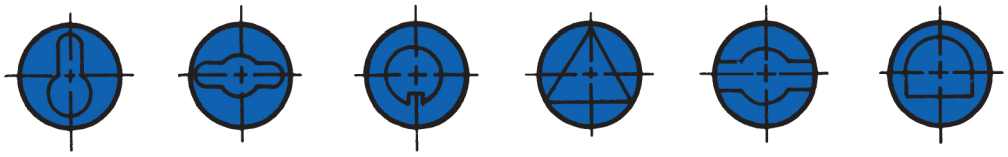

SEND SKETCH FOR PRICE QUOTATION

NOTE: For Shapes that are not symmetrical – specify location of shape in relation to center line of holder so that punches and dies can be properly keyed. Listed below are examples of common special shapes. When ordering, please submit a sketch with dimensions as shown. Also specify material thickness being punched and keying information by (point-X) in relation to the front of the machine.

KEYHOLE	HEELED OBRD.	DOUBLE KEYHOLE	SINGLE "D"	KEYWAY
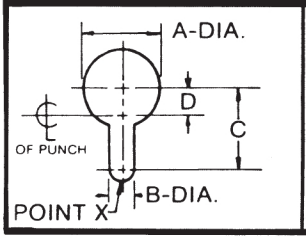	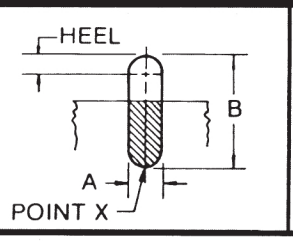	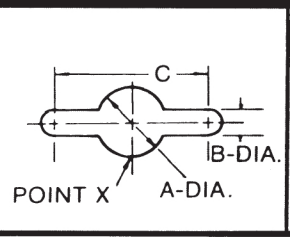	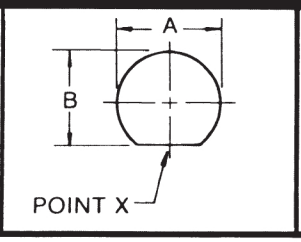	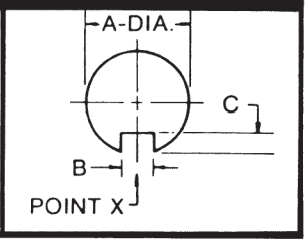

When ordering shaped punches and dies for any keyed holder, specify by placing suffix "K" after the round hole catalog number. Also forward description and/ or sketch with complete dimensions of shape – type and thickness of material to be punched or die size.

When ordering keyed punch guides, required for shaped hole missing punching – specify by placing the suffix "K" after the round hole catalog number.

2 KEYWAYS IN GUDES ALLOWS PUNCH SHAPE TO BE ROTATED 90°.

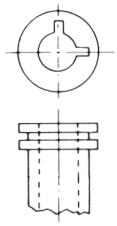

EXAMPLE: HP 152 PUNCH (ROUND HOLE
HPA 152K SHAPED PUNCH ASS'Y
.1875 x .375 RECTANGLE

EXAMPLE: HP 153 DIE (ROUND HOLE)
HPA 153K SHAPED DIE
.194 x .381 RECTANGLE

EXAMPLE: HP 154 GUIDE (FOR ROUND HOLE PUNCHING)
HPA 154K KEYED GUIDE (FOR ROUND & SHAPED HOLE PUNCHING)

PRESS BRAKE MOUNTING INFORMATION

Shown below are various mounting arrangements that may be helpful in determining the best method for your application.

See Fig. 1
This method requires a template that matches the hole pattern of the part to be punched. The template is placed in the 4-7/8" wide recess of the Bed Rail. Bolting or securing the template to the Bed Rail is not required. The template material is .500" thick cold rolled steel. Any width template from 1" to 4-3/4" may be used to suit the requirement. For template width from 4-3/4" to 6" – remove the 3/8" wide keeper bar. The purpose of the 3/8" keeper bar is to provide a 4-7/8" wide retainer space when using Bed Rail Spacer as shown in Figure 2. (See page 1 for Bed Rail Spacers.) The template is produced by drilling and reaming a .375 diameter pilot pin hole for each round hole to be punched in the part. (Pilot pin is on the centerline of each "C" frame unit.) For shaped hole locations – drill and ream for 2 - .375" diameter pilot pins on 1.500" center. For economy reasons – a template may be provided with the hole pattern layout of more than one part. In this case the holes are generally color coded or stenciled for easy identification.

FIG. 1

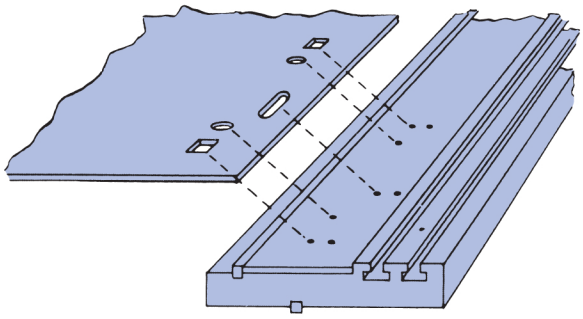

(See Fg. 1 for Bed Rail Dimensions)

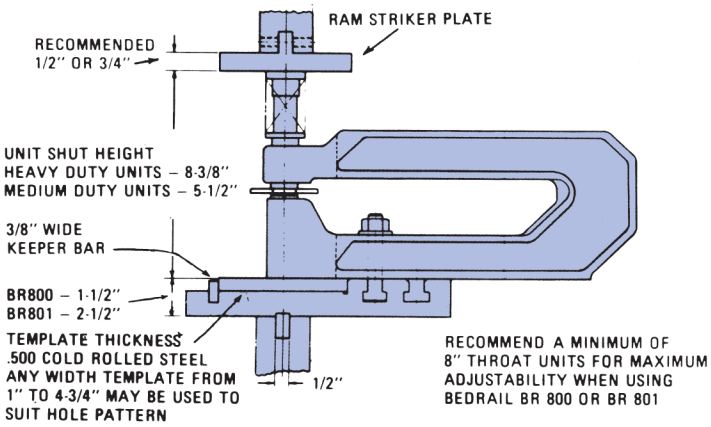

Illustration to show Template or Base Plate setup with medium duty Punching and Notching units.

FIG. 2
Illustration to show Bed Rail No. BR800 or BR801 with Bed Rail Spacer that can be used instead of a template. Spacer can be adjusted along the rail to suit a particular hole pattern. When using this method, we recommend the use of 8" throat units or greater, for maximum front to back adjustment.

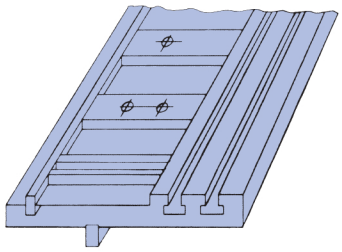

FIG. 3
Illustration to show how flanges can be added to the Press Ram to accommodate a wider striking area.

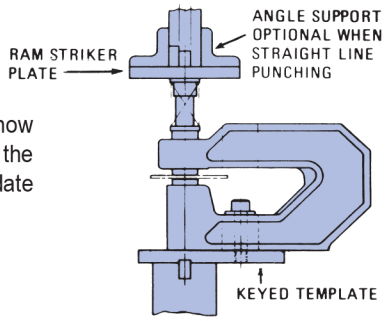

FIG. 4
Illustration to show angle supports to adapt low shut height presses to accommodate Heavy Duty "C" Frame Units. Not suitable for Medium Duty "C" Frame Units.

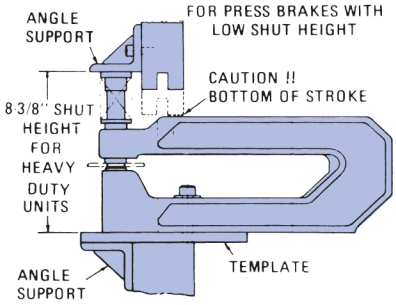

FIG. 5
Illustration to show Light Duty Units being mounted on BR100 Bed Rail. See Light Duty Catalog.

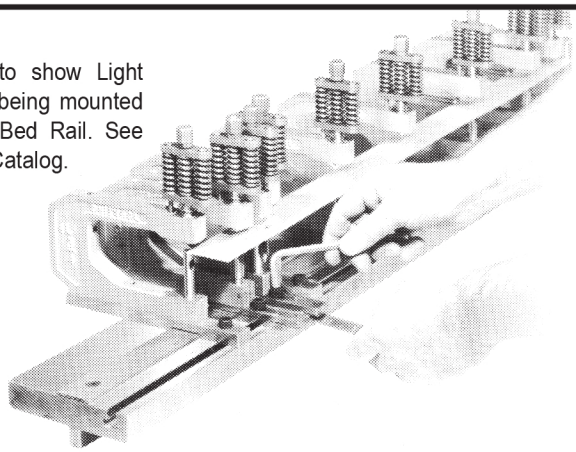

Extruded hole data for #6, #8 and #10 sheet metal screws or machine screws

FOR #6 SHEET METAL OR MACHINE SCREW

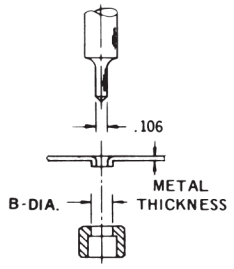

METAL THICKNESS	B DIA.	CAN BE TAPPED FOR MACH. SCREWS
24 Ga. .0239	.169	No
22 Ga. .0299	.181	No
20 Ga. .0359	.193	No
18 Ga. .0478	.217	Yes
16 Ga. .0598	.241	Yes

FOR #8 SHEET METAL OR MACHINE SCREW

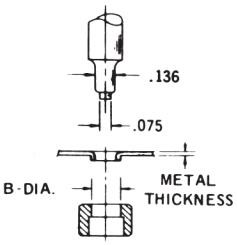

METAL THICKNESS	B DIA.	CAN BE TAPPED FOR MACH. SCREWS
24 Ga. .0239	.199	No
22 Ga. .0299	.211	No
20 Ga. .0359	.223	No
18 Ga. .0478	.247	Yes
16 Ga. .0598	.271	Yes

FOR #10 SHEET METAL OR MACHINE SCREW

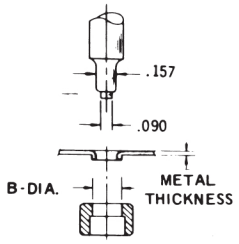

METAL THICKNESS	B DIA.	CAN BE TAPPED FOR MACH. SCREWS
24 Ga. .0239	.220	No
22 Ga. .0299	.232	No
20 Ga. .0359	.244	No
18 Ga. .0478	.268	Yes
16 Ga. .0598	.292	Yes

ELECTRICAL KNOCKOUT CONDUIT HOLES

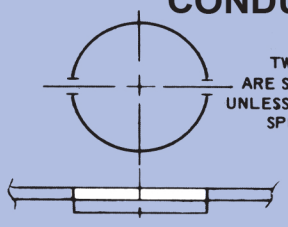

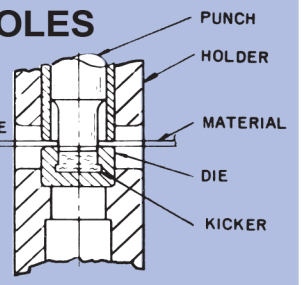

SINGLE KNOCKOUT

Knockout punches and dies can be furnished in standard units or for fabricating type machines. The dies are furnished with a 'kicker" to force the slug out of the die for easy removal of the material.

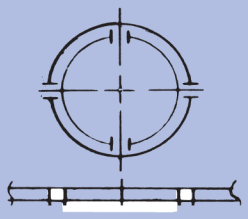

PRICE ON APPLICATION

DOUBLE KNOCKOUT

CONDUIT SIZE	PUNCH SIZE FOR SLIP FIT HOLE	
3/8	11/16	USE STANDARD UNITS
1/2	7/8	
3/4	1 1/8	
1	1 3/8	
1 1/4	1 3/4	
1 1/2	2	
2	2 1/2	
2 1/2	3	
3	3 5/8	REQUIRE SPECIAL UNITS
3 1/2	4 1/8	
4	4 5/8	
5	5 5/8	
6	6 3/4	

COUNTERSINK HOLES FOR FLAT HEAD SCREWS

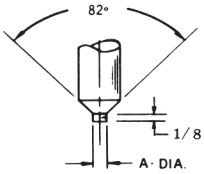

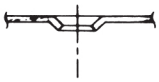

SCREW SIZE	NO. 6		NO. 8		NO. 10		1/4"		5/16"		3/8"	
M SERIES UNIT	M-1 1/4		M-1 3/4		M-1 3/4		M-1 3/4		M-2 1/4		M-2 1/4	
H SERIES UNIT	H-1 1/4		H-1 1/4		H-1 1/2		H-1 1/2		H-2		H-2	
METAL THICKNESS	Punch A	Die Dia.	Punch A	Die Dia.	Punch A	Die Dia.	Punch A	Die Dia.	Punch A	Die Dia.	Punch A	Die Dia.
24 ga. .0239	.120	.296	.146	.352	.157	.405	.183	.530	.213	.660	.238	.789
22 ga. .0299	.125	.306	.153	.357	.165	.410	.190	.535	.219	.666	.245	.794
20 ga. .0359	.142	.313	.167	.369	.171	.416	.197	.541	.226	.671	.252	.800
18 ga. .0478	.148	.318	.174	.373	.185	.427	.211	.552	.240	.682	.266	.810
16 ga. .0598	.157	.329	.188	.385	.200	.438	.227	.563	.253	.693	.281	.822
14 ga. .0747	.165	.343	.206	.398	.217	.452	.239	.570	.270	.707	.292	.835
12 ga. .1046	.144	.360	.175	.426	.200	.480	.278	.604	.304	.734	.332	.863
10 ga. .1345	.150	.397	.200	.454	.200	.507	.288	.625	.341	.761	.369	.890

GENERAL INFORMATION

TOOL STEELS FOR PUNCHES AND DIES

Unittool has standardized on Type O-1 Oil Hardening Tool Steel. This material has performed satisfactorily for most applications. Occasionally, tool steels of other characteristics may be required to suit a particular application. Punches and dies, produced from the tool steels listed below are available – ask for quotation.

Type M-2 (High Speed)
Type D-2 (High Carbon – High Chrome)
Type A-2 (5% Chrome)
Type S-7 (Shock Resistant)

PUNCHING INFORMATION

The maximum hole size and material thickness for each punching and notching unit is specified in the catalog. The metal thickness refers to SAE 1010-1020 – mild steel. Other materials may affect the stripping, punching and/or notching ability of the equipment. Refer to tonnage chart on page 12 for tonnage requirement and shear strength of these materials. Listed below is other helpful information.

ALUMINIUM, COPPER & BRASS

These materials have a low shear strength and therefore cause a "drag" and "galling" effect. To help overcome this condition – keep punches sharp and lubricate punch and work piece with a kerosene solution. The slugs have a tendency to fuse together when punching soft material. Take caution that slugs do not pile up in slug chutes. It is helpful to decrease die clearance to approximately 75% of mild steel clearance.

STAINLESS STEEL

The shear strength of stainless steel is approximately 40% to 50% greater than mild steel depending on the physical properties of the material. The capacity of the punching or notching unit must be reduced accordingly. Punches and dies should be sharpened more frequently for good hole quality and also to eliminate tonnage "build up" due to additional forces required when punches and dies lose their keen cutting edges.

RE-ROLLED RAIL STEEL

Re-rolled rail steel is one of the most difficult material to punch and notch due to extreme hard spots that cause breakdown of the punch and die cutting edges. In many cases, a particular area may be harder than the punch. The material is unpredictable – some parts may punch satisfactorily and other parts may cause excessive punch wear or breakage. Experience has proven that punches produced from M-2 (High Speed) tool steel give the most satisfactory results. Die buttons are generally subject to approximately 50% of the punch wear and therefore Unittool standard Type O-1 oil hardening tool steel generally performs satisfactorily for medium protection.

RULE OF THUMB

There is definite relationship or ratio that must be maintained between the thickness of material being punched and the minimum punch tip diameter or hole size. The rule of thumb for punching mild steel with a yield or shear strength of 50,000 P.S.I. is that the punch diameter must be equal to or greater than the material thickness to be punched. This of course may be violated under proper conditions. For example: if a press brake or hydraulic press is being used, the shock loads on the punch tips are greatly reduced as the punch enters the material; whereas, high speed mechanical presses create a greater shock load on the punch tip that result in greater failures.

Dull punches and dies require greater punching pressure and may result in premature failure.

It is helpful in marginal operations to provide the punch tip with a shear ground face which will reduce the punching load on the punch column. Special guided punch tips are also helpful in extending punch life.

If material with less yield or shear strength is being punched – the thickness to diameter ratio may be altered to as much as 1 to 2, (Example: 1/4" diameter hole in 1/2" material that has a yield strength of 25,000 P.S.I.) or even greater under ideal conditions. If the material has a yield strength of 75,000 P.S.I., the ratio must be reversed to approximately 2 to 1 (Example: 1/2" diameter hole in 1/4" material).

MAINTENANCE CHECKLIST

Many times production will lag and quality will fall below standard because preventive maintenance has been neglected. It is the little things that develop into major problems which reflect high production costs. Productions costs can be decreased if your punching and notching equipment is properly maintained.

You will find the following check list helpful in maintaining best performance of your Unittool equipment.

REPLACE
WORN SPRINGS!!

CHECKLIST

A – Excessive Burrs Result From:
1. Dull punch and/or die
2. Excessive die clearance
3. Misalignment of "C" frame holder due to fall or impact
4. Press striker plate or bolster plate out of parallel

B – Refusal to Strip Results From:
1. Dull punch and/or die
2. Insufficient die clearance
3. Stock thickness in excess to unit capacity
4. Press shut height below specifications
5. Excessive galling of punch tip
6. Irregular die heights when units are close together will warp material while punching and cause "lock up" during the stripping action.
7. Damaged stripper spring
8. If punching material with scale or rust – the guides may be packed with rust or scale particles that cause the punch to bind in the guide or may cause the guide to "hang up" in the holder

C – Spring Breakage Results From:
1. Press shut height too low, causing springs to overstress or bottom

D – Excessive Punch and/or Die Wear Result From:
1. Holder out of alignment
2. Material being punched has excessive hardness
3. Striker plate is upset or not square to bed of press causing side load, thereby, throwing punch and die into shear

E – "C" Frame Holder Out of Alignment Results From:
1. Unit not supported properly
2. Shut height too low, causing unit to bottom and close feed clearance
3. Dirt or grit underneath holder
4. Press ram and bed not parallel

FREQUENT QUESTIONS

WHAT IS SHUT HEIGHT?

Shut Height for punching and notching equipment is the distance from the base of the unit to the ram of the press when the punch has entered the die.

The Shut Height for a press is defined as the distance between the bed and the ram when the stroke is down.

WHAT IS DIE HEIGHT?

Die Height is the distance from the base of the punching or notching unit to the top of the die surface.

WHAT IS FEED CLEARANCE?

Feed Clearance in a unit is the distance between the bottom of the guide and/or holder, and the top of the die when the press stroke is up.

WHAT IS DIE CLEARANCE?

Die Clearance is the difference in size between the punch and die. For example: if a punch size is .750" diameter and the die size is .762" diameter, it has a total of .012" die clearance (.006" per side).

For good hole quality, the die clearance should be increased as the material thickness is increased and vice versa. The recommended die clearance for unitized tooling is as follows:

RECOMMENDED DIE CLEARANCE FOR UNITIZED TOOLING

Up to 1/16" Thick Mild Steel	.006 total
over 1/16" to 1/8" Thick Mild Steel	.012 total
over 1/6" to 3/16" Thick Mild Steel	.028 total
over 3/16" to 1/4" Thick Mild Steel	.043 total
over 1/4" to 3/8" Thick Mild Steel	.075 total
over 3/8" to 1/2" Thick Mild Steel	.100 total
over 1/2" to 3/4" Thick Mild Steel	.150 total

The following drawings will show result of proper and excessive die clearance.

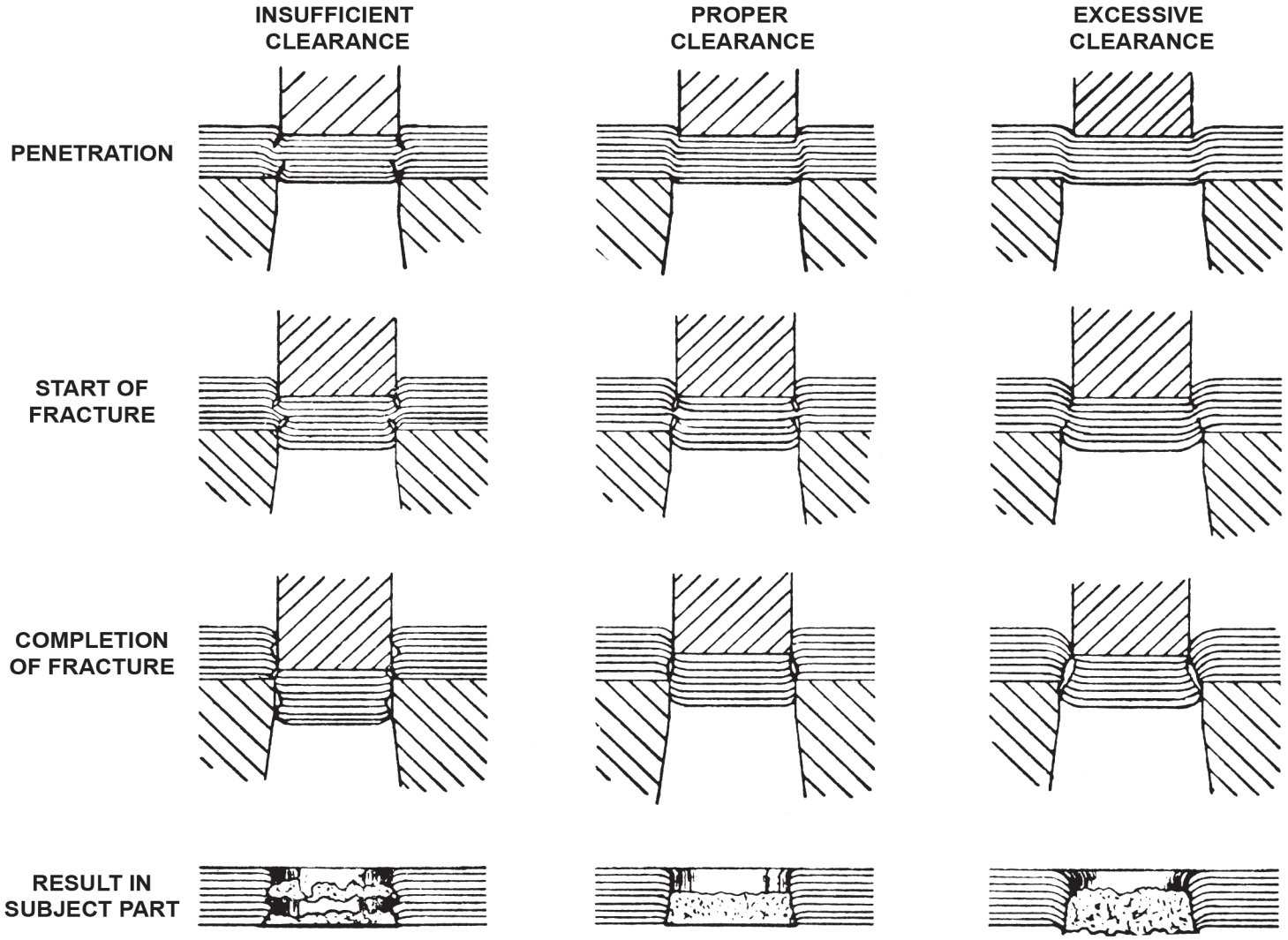

FRACTION AND DECIMAL EQUIVALENTS

	1/64	.015625	
	1/32	.03125	
	3/64	.046875	
	1/16	.0625	
	5/64	.078125	
	3/32	.09375	
	7/64	.109375	
1 - 8		.125	
	9/64	.140625	
	5/32	.15625	
	11/64	.171875	
	3/16	.1875	
	13/64	.203125	
	7/32	.21875	
	15/64	.234375	
1 - 4		.25	
	17/64	.265625	
	9/32	.28125	
	19/64	.296875	
	5/16	.3125	
	21/64	.328125	
	11/32	.34375	
	23/64	.359375	
3 - 8		.375	
	25/64	.390625	
	13/32	.40625	
	27/64	.421875	
	7/16	.4375	
	29/64	.453125	
	15/32	.46875	
	31/64	.484375	
1 - 2		.5	
	33/64	.515625	
	17/32	.53125	
	35/64	.546875	
	9/16	.5625	
	37/64	.578125	
	19/32	.59375	
	39/64	.609375	
5 - 8		.625	
	41/64	.640625	
	21/32	.65625	
	43/64	.671875	
	11/16	.6875	
	45/64	.703125	
	23/32	.71875	
	47/64	.734375	
3 - 4		.75	
	49/64	.765625	
	25/32	.78125	
	51/64	.796875	
	13/16	.8125	
	53/64	.828125	
	27/32	.84375	
	55/64	.859375	
7 - 8		.875	
	57/64	.890625	
	29/32	.90625	
	59/64	.921875	
	15/16	.9375	
	61/64	.953125	
	31/32	.96875	
	63/64	.984375	
1		1.	

USEFUL INFORMATION

To find circumference of a circle multiply diameter by 3.1416.

To find diameter of a circle multiply circumference by .31831.

To find area of a circle multiply square of diameter by .7854.

Area of rectangle = length multiplied by breadth. Doubling the diameter of a circle increases its area four times.

To find area of a triangle multiply base by 1/2 perpendicular height.

Area of ellipse = product of both diameters x .7854.

Area of parallelogram = base x altitude.

To find side of an inscribed square multiply diameter by 0.7071 or multiply circumference by 0.2251 or divide circumference by 4.4428.

United States Standard Gauge

(REVISED)

Manufacturers' Standard Gage for Sheet Steel

Based on 0.0014945 in. per oz. per sq. ft.; 0.023912 in. per lb. per sq. ft. (reciprocal of 41.820 lb. per sq. ft. per in. thick); 3.443329 in. per lb. per sq. in

Standard Gage No.	Thickness Inches Decimal Equivalent	Ounces per Sq. Ft.	Pounds per Square Inch	Pounds per Square Foot
3	0.2391	160	0.069444	10.0000
4	.2242	150	.065104	9.3750
5	.2092	140	.060764	8.7500
6	.1943	130	.056424	8.1250
7	.1793	120	.052083	7.5000
8	.1644	110	.047743	6.8750
9	.1495	100	.043403	6.2500
10	.1345	90	.039062	5.6250
11	.1196	80	.034722	5.0000
12	.1046	70	.030382	4.3750
13	.0897	60	.026042	3.7500
14	.0747	50	.021701	3.1250
15	.0673	45	.019531	2.8125
16	.0598	40	.017361	2.5000
17	.0538	36	.015625	2.2500
18	.0478	32	.013889	2.0000
19	.0418	28	.012153	1.7500
20	.0359	24	.010417	1.5000
21	.0329	22	.0095486	1.3750
22	.0299	20	.0086806	1.2500
23	.0269	18	.0078125	1.1250
24	.0239	16	.0069444	1.0000
25	.0209	14	.0060764	0.87500
26	.0179	12	.0052083	.75000
27	.0164	11	.0047743	.68750
28	.0149	10	.0043403	.62500
29	.0135	9	.0039062	.56250
30	.0120	8	.0034722	.50000
31	.0105	7	.0030382	.43750
32	.0097	6.5	.0028212	.40625
33	.0090	6	.0026042	.37500
34	.0082	5.5	.0023872	.34375
35	.0075	5	.0021701	.31250
36	.0067	4.5	.0019531	.28125
37	.0064	4.25	.0018446	.26562
38	.0060	4	.0017361	.25000

Decimal Equivalents of Number Size Drills

No.	Size of Drill in Inches	No.	Size of Drill in Inches	No.	Size of Drill in Inches
1	0.2280	21	0.1590	41	0.0960
2	0.2210	22	0.1570	42	0.0935
3	0.2130	23	0.1540	43	0.0890
4	0.2090	24	0.1520	44	0.0860
5	0.2055	25	0.1495	45	0.0820
6	0.2040	26	0.1470	46	0.0810
7	0.2010	27	0.1440	47	0.0785
8	0.1990	28	0.1405	48	0.0760
9	0.1960	29	0.1360	49	0.0730
10	0.1935	30	0.1285	50	0.0700
11	0.1910	31	0.1200	51	0.0670
12	0.1890	32	0.1160	52	0.0635
13	0.1850	33	0.1130	53	0.0595
14	0.1820	34	0.1110	54	0.0550
15	0.1800	35	0.1100	55	0.0520
16	0.1770	36	0.1065	56	0.0465
17	0.1730	37	0.1040	57	0.0430
18	0.1695	38	0.1015	58	0.0420
19	0.1660	39	0.0995	59	0.0410
20	0.1610	40	0.0980	60	0.0400

Decimal Equivalents of Letter Size Drills

Letter	Size of Drill in Inches	Letter	Size of Drill in Inches	Letter	Size of Drill in Inches
S	0.348	L	0.290	E	0.250
R	0.339	K	0.281	D	0.246
Q	0.332	J	0.277	C	0.242
P	0.323	I	0.272	B	0.238
O	0.316	H	0.266	A	0.236
N	0.302	G	0.261	. . .	. . . . .
M	0.295	F	0.257	. . .	. . . . .

CONVERSION CHART INCH/MM

Drill No. or Letter		Inch	mm
		.001	0.0254
		.002	0.0508
		.003	0.0762
		.004	0.1016
		.005	0.1270
		.006	0.1524
		.007	0.1778
		.008	0.2032
		.009	0.2286
		.010	0.2540
		.011	0.2794
		.012	0.3048
		.013	0.3302
80	.0135	.014	0.3556
79	.0145	.015	0.3810
	1/64	.0156	0.3969
78		.016	0.4064
		.017	0.4318
77		.018	0.4572
		.019	0.4826
76		.020	0.5080
75		.021	0.5334
74	.0225	.022	0.5588
		.023	0.5842
73		.024	0.6096
72		.025	0.6350
71		.026	0.6604
		.027	0.6858
70		.028	0.7112
69	.0292	.029	0.7366
		.030	0.7620
68		.031	0.7874
	1/32	.0312	0.7937
67		.032	0.8128
66		.033	0.8382
		.034	0.8636
65		.035	0.8890
64		.036	0.9144
63		.037	0.9398
62		.038	0.9652
61		.039	0.9906
		.0394	1.0000
60		.040	1.0160
59		.041	1.0414
58		.042	1.0668
57		.043	1.0922
		.044	1.1176
		.045	1.1430
56	.0465	.046	1.1684
	3/64	.0469	1.1906
		.047	1.1938
		.048	1.2192
		.049	1.2446
		.050	1.2700
		.051	1.2954
55		.052	1.3208
		.053	1.3462
		.054	1.3716
54		.055	1.3970
		.056	1.4224
		.057	1.4478
		.058	1.4732
53	.0595	.059	1.4986
		.060	1.5240
		.061	1.5494
		.062	1.5748
	1/16	.0625	1.5875
		.063	1.6002
52	.0635	.064	1.6256
		.065	1.6510
		.066	1.6764
51		.067	1.7018
		.068	1.7272
		.069	1.7526
50		.070	1.7780
		.071	1.8034
		.072	1.8288
49		.073	1.8542
		.074	1.8796
		.075	1.9050
48		.076	1.9304
		.077	1.9558
47	.0785	.078	1.9812
	5/64	.0781	1.9844
		.0787	2.0000
		.079	2.0066
		.080	2.0320
46		.081	2.0574
45		.082	2.0828
		.083	2.1082
		.084	2.1336
		.085	2.1590
44		.086	2.1844
		.087	2.2098
		.088	2.2352
43		.089	2.2606
		.090	2.2860
		.091	2.3114
		.092	2.3368
42	.0935	.093	2.3622
	3/32	.0937	2.3812
		.094	2.3876
		.095	2.4130
41		.096	2.4384
		.097	2.4638
40		.098	2.4892
39	.0995	.099	2.5146
		.100	2.5400

Drill No. or Letter		Inch	mm
38	.1015	.101	2.5654
		.102	2.5908
		.103	2.6162
37		.104	2.6416
		.105	2.6670
36	.1065	.106	2.6924
		.107	2.7178
		.108	2.7432
		.109	2.7686
	7/64	.1094	2.7781
35		.110	2.7940
34		.111	2.8194
		.112	2.8448
33		.113	2.8702
		.114	2.8956
		.115	2.9210
32		.116	2.9464
		.117	2.9718
		.118	2.9972
		.1181	3.0000
		.119	3.0226
31		.120	3.0480
		.121	3.0734
		.122	3.0988
		.123	3.1242
		.124	3.1496
	1/8	.125	3.1750
		.126	3.2004
		.127	3.2258
30	.1285	.128	3.2512
		.129	3.2766
		.130	3.3020
		.131	3.3274
		.132	3.3528
		.133	3.3782
		.134	3.4036
		.135	3.4290
29		.136	3.4544
		.137	3.4798
		.138	3.5052
		.139	3.5306
28	.1405	.140	3.5560
	9/64	.1406	3.5719
		.141	3.5814
		.142	3.6068
		.143	3.6322
27		.144	3.6576
		.145	3.6830
		.146	3.7084
26		.147	3.7338
		.148	3.7592
25	.1495	.149	3.7846
		.150	3.8100
		.151	3.8354
24		.152	3.8608
		.153	3.8862
23		.154	3.9116
		.155	3.9370
		.156	3.9624
	5/32	.1562	3.9687
22		.157	3.9878
		.1575	4.0000
		.158	4.0132
21		.159	4.0386
		.160	4.0640
20		.161	4.0894
		.162	4.1148
		.163	4.1402
		.164	4.1656
		.165	4.1910
19		.166	4.2164
		.167	4.2418
		.168	4.2672
18	.1635	.169	4.2926
		.170	4.3180
		.171	4.3434
	11/64	.1719	4.3656
		.172	4.3688
17		.173	4.3942
		.174	4.4196
		.175	4.4450
		.176	4.4704
16		.177	4.4958
		.178	4.5212
		.179	4.5466
15		.180	4.5720
		.181	4.5974
14		.182	4.6228
		.183	4.6482
		.184	4.6736
13		.185	4.6990
		.186	4.7244
		.187	4.7498
	3/16	.1875	4.7625
		.188	4.7752
12		.189	4.8006
		.190	4.8260
11		.191	4.8514
		.192	4.8768
10	.1935	.193	4.9022
		.194	4.9276
		.195	4.9530
9		.196	4.9784
		.1969	5.0000
		.197	5.0038
		.198	5.0292
		.199	5.0546
8		.200	5.0800

Drill No. or Letter		Inch	mm
7		.201	5.1054
		.202	5.1308
		.203	5.1562
	13/64	.2031	5.1594
6		.204	5.1816
5	.2055	.205	5.2070
		.206	5.2324
		.207	5.2578
		.208	5.2832
4		.209	5.3086
		.210	5.3340
		.211	5.3594
		.212	5.3848
3		.213	5.4102
		.214	5.4356
		.215	5.4610
		.216	5.4864
		.217	5.5118
		.218	5.5372
	7/32	.2187	5.5562
		.219	5.5626
		.220	5.5880
2		.221	5.6134
		.222	5.6388
		.223	5.6642
		.224	5.6896
		.225	5.7150
		.226	5.7404
		.227	5.7658
1		.228	5.7912
		.229	5.8166
		.230	5.8420
		.231	5.8674
		.232	5.8928
		.233	5.9182
A		.234	5.9436
	15/64	.2344	5.9531
		.235	5.9690
		.236	5.9944
		.2362	6.0000
		.237	6.0198
B		.238	6.0452
		.239	6.0706
		.240	6.0960
		.241	6.1214
C		.242	6.1468
		.243	6.1722
		.244	6.1976
		.245	6.2230
D		.246	6.2484
		.247	6.2738
		.248	6.2992
		.249	6.3246
E	1/4	.250	6.3500
		.251	6.3754
		.252	6.4008
		.253	6.4262
		.254	6.4516
		.255	6.4770
		.256	6.5024
F		.257	6.5278
		.258	6.5532
		.259	6.5786
		.260	6.6040
G		.261	6.6294
		.262	6.6548
		.263	6.6802
		.264	6.7056
		.265	6.7310
	17/64	.2656	6.7469
H		.266	6.7564
		.267	6.7818
		.268	6.8072
		.269	6.8326
		.270	6.8580
		.271	6.8834
I		.272	6.9088
		.273	6.9342
		.274	6.9596
		.275	6.9850
		.2756	7.0000
		.276	7.0104
J		.277	7.0358
		.278	7.0612
		.279	7.0866
		.280	7.1120
K		.281	7.1374
	9/32	.2812	7.1437
		.282	7.1628
		.283	7.1882
		.284	7.2136
		.285	7.2390
		.286	7.2644
		.287	7.2898
		.288	7.3152
		.289	7.3406
L		.290	7.3660
		.291	7.3914
		.292	7.4168
		.293	7.4422
		.294	7.4676
M		.295	7.4930
		.296	7.5184
	19/64	.2969	7.5406
		.297	7.5438
		.298	7.5692
		.299	7.5946
		.300	7.6200

Drill No. or Letter		Inch	mm
		.301	7.6454
N		.302	7.6708
		.303	7.6962
		.304	7.7216
		.305	7.7470
		.306	7.7724
		.307	7.7978
		.308	7.8232
		.309	7.8486
		.310	7.8740
		.311	7.8994
		.312	7.9248
	5/16	.3125	7.9375
		.313	7.9502
		.314	7.9756
		.3150	8.0000
		.315	8.0010
O		.316	8.0264
		.317	8.0518
		.318	8.0772
		.319	8.1026
		.320	8.1280
		.321	8.1534
		.322	8.1788
P		.323	8.2042
		.324	8.2296
		.325	8.2550
		.326	8.2804
		.327	8.3058
		.328	8.3312
	21/64	.3281	8.3344
		.329	8.3566
		.330	8.3820
		.331	8.4074
Q		.332	8.4328
		.333	8.4582
		.334	8.4836
		.335	8.5090
		.336	8.5344
		.337	8.5598
		.338	8.5852
R		.339	8.6106
		.340	8.6360
		.341	8.6614
		.342	8.6868
		.343	8.7122
	11/32	.3437	8.7312
		.344	8.7376
		.345	8.7630
		.346	8.7884
		.347	8.8138
S		.348	8.8392
		.349	8.8646
		.350	8.8900
		.351	8.9154
		.352	8.9408
		.353	8.9662
		.354	8.9916
		.3543	9.0000
		.355	9.0170
		.356	9.0424
		.357	9.0678
T		.358	9.0932
		.359	9.1185
	23/64	.3594	9.1281
		.360	9.1440
		.361	9.1694
		.362	9.1948
		.363	9.2202
		.364	9.2456
		.365	9.2710
		.366	9.2964
		.367	9.3218
U		.368	9.3472
		.369	9.3726
		.370	9.3980
		.371	9.4234
		.372	9.4488
		.373	9.4742
		.374	9.4996
	3/8	.375	9.5250
		.376	9.5504
V		.377	9.5758
		.378	9.6012
		.379	9.6266
		.380	9.6520
		.381	9.6774
		.382	9.7028
		.383	9.7282
		.384	9.7536
		.385	9.7790
W		.386	9.8044
		.387	9.8298
		.388	9.8552
		.389	9.8806
		.390	9.9060
	25/64	.3906	9.9219
		.391	9.9314
		.392	9.9568
		.393	9.9822
		.3937	10.0000
		.394	10.0076
		.395	10.0330
		.396	10.0584
X		.397	10.0838
		.398	10.1092
		.399	10.1346
		.400	10.1600

Drill No. or Letter		Inch	mm
		.401	10.1854
		.402	10.2108
		.403	10.2362
Y		.404	10.2616
		.405	10.2870
		.406	10.3124
	13/32	.4062	10.3187
		.407	10.3378
		.408	10.3632
		.409	10.3886
		.410	10.4140
		.411	10.4394
		.412	10.4648
Z		.413	10.4902
		.414	10.5156
		.415	10.5410
		.416	10.5664
		.417	10.5918
		.418	10.6172
		.419	10.6426
		.420	10.6680
		.421	10.6934
	27/64	.4219	10.7156
		.422	10.7188
		.423	10.7442
		.424	10.7696
		.425	10.7590
		.426	10.8204
		.427	10.8458
		.428	10.8712
		.429	10.8966
		.430	10.9220
		.431	10.9474
		.432	10.9728
		.433	10.9982
		.4331	11.0000
		.434	11.0236
		.435	11.0490
		.436	11.0744
		.437	11.0998
	7/16	.4375	11.1125
		.438	11.1252
		.439	11.1506
		.440	11.1760
		.441	11.2014
		.442	11.2268
		.443	11.2522
		.444	11.2776
		.445	11.3030
		.446	11.3284
		.447	11.3538
		.448	11.3792
		.449	11.4046
		.450	11.4300
		.451	11.4554
		.452	11.4808
		.453	11.5062
	29/64	.4531	11.5094
		.454	11.5316
		.455	11.5570
		.456	11.5824
		.457	11.6078
		.458	11.6332
		.459	11.6586
		.460	11.6840
		.461	11.7094
		.462	11.7348
		.463	11.7602
		.464	11.7856
		.465	11.8110
		.466	11.8364
		.467	11.8618
		.468	11.8872
	15/32	.4687	11.9062
		.469	11.9126
		.470	11.9380
		.471	11.9634
		.472	11.9888
		.4724	12.0000
		.473	12.0142
		.474	12.0396
		.475	12.0650
		.476	12.0904
		.477	12.1158
		.478	12.1412
		.479	12.1666
		.480	12.1920
		.481	12.2174
		.482	12.2428
		.483	12.2682
		.484	12.2936
	31/64	.4844	12.3031
		.485	12.3190
		.486	12.3444
		.487	12.3698
		.488	12.3952
		.489	12.4206
		.490	12.4460
		.491	12.4714
		.492	12.4968
		.493	12.5222
		.494	12.5476
		.495	12.5730
		.496	12.5984
		.497	12.6238
		.498	12.6492
		.499	12.6746
	1/2	.500	12.7000

CONVERSION CHART INCH/MM

	Inch	mm
	.501	12.7254
	.502	12.7508
	.503	12.7762
	.504	12.8016
	.505	12.8270
	.506	12.8524
	.507	12.8778
	.508	12.9032
	.509	12.9286
	.510	12.9540
	.511	12.9794
	.5118	13.0000
	.512	13.0048
	.513	13.0302
	.514	13.0556
	.515	13.0810
33/64	.5156	13.0968
	.516	13.1064
	.517	13.1318
	.518	13.1572
	.519	13.1826
	.520	13.2080
	.521	13.2334
	.522	13.2588
	.523	13.2842
	.524	13.3096
	.525	13.3350
	.526	13.3604
	.527	13.3858
	.528	13.4112
	.529	13.4366
	.530	13.4620
	.531	13.4874
17/32	.5312	13.4937
	.532	13.5128
	.533	13.5382
	.534	13.5636
	.535	13.5890
	.536	13.6144
	.537	13.6398
	.538	13.6652
	.539	13.6906
	.540	13.7160
	.541	13.7414
	.542	13.7668
	.543	13.7922
	.544	13.8176
	.545	13.8430
	.546	13.8684
35/64	.5469	13.8906
	.547	13.8938
	.548	13.9192
	.549	13.9446
	.550	13.9700
	.551	13.9954
	.5512	14.0000
	.552	14.0208
	.553	14.0462
	.554	14.0716
	.555	14.0970
	.556	14.1224
	.557	14.1478
	.558	14.1732
	.559	14.1986
	.560	14.2240
	.561	14.2494
	.562	14.2748
9/16	.5625	14.2875
	.563	14.3002
	.564	14.3256
	.565	14.3510
	.566	14.3764
	.567	14.4018
	.568	14.4272
	.569	14.4526
	.570	14.4780
	.571	14.5034
	.572	14.5288
	.573	14.5542
	.574	14.5796
	.575	14.6050
	.576	14.6304
	.577	14.6558
	.578	14.6812
37/64	.5781	14.6844
	.579	14.7066
	.580	14.7320
	.581	14.7574
	.582	14.7828
	.583	14.8082
	.584	14.8336
	.585	14.8590
	.586	14.8844
	.587	14.9098
	.588	14.9352
	.589	14.9606
	.590	14.9860
	.5906	15.0000
	.591	15.0114
	.592	15.0368
	.593	15.0622
19/32	.5937	15.0812
	.594	15.0876
	.595	15.1130
	.596	15.1384
	.597	15.1638
	.598	15.1892
	.599	15.2146

	Inch	mm
	.600	15.2400
	.601	15.2654
	.602	15.2908
	.603	15.3162
	.604	15.3416
	.605	15.3670
	.606	15.3924
	.607	15.4178
	.608	15.4432
	.609	15.4686
39/64	.6094	15.4781
	.610	15.4940
	.611	15.5194
	.612	15.5448
	.613	15.5702
	.614	15.5956
	.615	15.6210
	.616	15.6464
	.617	15.6718
	.618	15.6972
	.619	15.7226
	.620	15.7480
	.621	15.7734
	.622	15.7988
	.623	15.8242
	.624	15.8496
5/8	.625	15.8750
	.626	15.9004
	.627	15.9258
	.628	15.9512
	.629	15.9766
	.6299	16.0000
	.630	16.0020
	.631	16.0274
	.632	16.0528
	.633	16.0782
	.634	16.1036
	.635	16.1290
	.636	16.1544
	.637	16.1798
	.638	16.2052
	.639	16.2306
	.640	16.2560
41/64	.6406	16.2719
	.641	16.2814
	.642	16.3068
	.643	16.3322
	.644	16.3576
	.645	16.3830
	.646	16.4084
	.647	16.4338
	.648	16.4592
	.649	16.4846
	.650	16.5100
	.651	16.5354
	.652	16.5608
	.653	16.5862
	.654	16.6116
	.655	16.6370
	.656	16.6524
21/32	.6562	16.6687
	.657	16.6878
	.658	16.7132
	.659	16.7386
	.660	16.7640
	.661	16.7894
	.662	16.8148
	.663	16.8402
	.664	16.8656
	.665	16.8910
	.666	16.9164
	.667	16.9418
	.668	16.9672
	.669	16.9926
	.6693	17.0000
	.670	17.0180
	.671	17.0434
43/64	.6719	17.0656
	.672	17.0688
	.673	17.0942
	.674	17.1196
	.675	17.1450
	.676	17.1704
	.677	17.1958
	.678	17.2212
	.679	17.2466
	.680	17.2720
	.681	17.2974
	.682	17.3228
	.683	17.3482
	.684	17.3736
	.685	17.3990
	.686	17.4244
	.687	17.4498
11/16	.6875	17.4625
	.688	17.4752
	.689	17.5006
	.690	17.5260
	.691	17.5514
	.692	17.5768
	.693	17.6022
	.694	17.6276
	.695	17.6530
	.696	17.6784
	.697	17.7038
	.698	17.7292
	.699	17.7546
	.700	17.7800

	Inch	mm
	.701	17.8054
	.702	17.8308
	.703	17.8562
45/64	.7031	17.8594
	.704	17.8816
	.705	17.9070
	.706	17.9324
	.707	17.9578
	.708	17.9832
	.7087	18.0000
	.709	18.0086
	.710	18.0340
	.711	18.0594
	.712	18.0848
	.713	18.1102
	.714	18.1356
	.715	18.1610
	.716	18.1864
	.717	18.2118
	.718	18.2372
23/32	.7187	18.2562
	.719	18.2626
	.720	18.2880
	.721	18.3134
	.722	18.3388
	.723	18.3642
	.724	18.3896
	.725	18.4150
	.726	18.4404
	.727	18.4658
	.728	18.4912
	.729	18.5166
	.730	18.5420
	.731	18.5674
	.732	18.5928
	.733	18.6182
	.734	18.6436
47/64	.7344	18.6532
	.735	18.6690
	.736	18.6944
	.737	18.7198
	.738	18.7452
	.739	18.7706
	.740	18.7960
	.741	18.8214
	.742	18.8468
	.743	18.8722
	.744	18.8976
	.745	18.9230
	.746	18.9484
	.747	18.9738
	.748	18.9992
	.7480	19.0000
	.749	19.0246
3/4	.750	19.0500
	.751	19.0754
	.752	19.1008
	.753	19.1262
	.754	19.1516
	.755	19.1770
	.756	19.2024
	.757	19.2278
	.758	19.2532
	.759	19.2786
	.760	19.3040
	.761	19.3294
	.762	19.3548
	.763	19.3802
	.764	19.4056
	.765	19.4310
49/64	.7656	19.4469
	.766	19.4564
	.767	19.4818
	.768	19.5072
	.769	19.5326
	.770	19.5580
	.771	19.5834
	.772	19.6088
	.773	19.6342
	.774	19.6596
	.775	19.6850
	.776	19.7104
	.777	19.7358
	.778	19.7612
	.779	19.7866
	.780	19.8120
	.781	19.8374
25/32	.7812	19.8433
	.782	19.8628
	.783	19.8882
	.784	19.9136
	.785	19.9390
	.786	19.9644
	.787	19.9898
	.7874	20.0000
	.788	20.0152
	.789	20.0406
	.790	20.0660
	.791	20.0914
	.792	20.1168
	.793	20.1422
	.794	20.1676
	.795	20.1930
	.796	20.2184
51/64	.7969	20.2402
	.797	20.2438
	.798	20.2692
	.799	20.2946

	Inch	mm
	.800	20.3200
	.801	20.3454
	.802	20.3708
	.803	20.3962
	.804	20.4216
	.805	20.4470
	.806	20.4724
	.807	20.4978
	.808	20.5232
	.809	20.5486
	.810	20.5740
	.811	20.5994
	.812	20.6248
13/16	.8125	20.6375
	.813	20.6502
	.814	20.6756
	.815	20.7010
	.816	20.7264
	.817	20.7518
	.818	20.7772
	.819	20.8026
	.820	20.8280
	.821	20.8534
	.822	20.8788
	.823	20.9042
	.824	20.9296
	.825	20.9550
	.826	20.9804
	.8268	21.0000
	.827	21.0058
	.828	21.0312
53/64	.8281	21.0344
	.829	21.0566
	.830	21.0820
	.831	21.1074
	.832	21.1328
	.833	21.1582
	.834	21.1836
	.835	21.2090
	.836	21.2344
	.837	21.2598
	.838	21.2852
	.839	21.3106
	.840	21.3360
	.841	21.3614
	.842	21.3868
	.843	21.4122
27/32	.8437	21.4312
	.844	21.4376
	.845	21.4630
	.846	21.4884
	.847	21.5138
	.848	21.5392
	.849	21.5646
	.850	21.5900
	.851	21.6154
	.852	21.6408
	.853	21.6662
	.854	21.6916
	.855	21.7170
	.856	21.7424
	.857	21.7678
	.858	21.7932
	.859	21.8186
55/64	.8594	21.8281
	.860	21.8440
	.861	21.8694
	.862	21.8948
	.863	21.9202
	.864	21.9456
	.865	21.9710
	.866	21.9964
	.8661	22.0000
	.867	22.0218
	.868	22.0472
	.869	22.0726
	.870	22.0980
	.871	22.1234
	.872	22.1488
	.873	22.1742
	.874	22.1996
7/8	.875	22.2250
	.876	22.2504
	.877	22.2758
	.878	22.3012
	.879	22.3266
	.880	22.3520
	.881	22.3774
	.882	22.4028
	.883	22.4282
	.884	22.4536
	.885	22.4790
	.886	22.5044
	.887	22.5298
	.888	22.5552
	.889	22.5806
	.890	22.6060
57/64	.8906	22.6219
	.891	22.6314
	.892	22.6568
	.893	22.6822
	.894	22.7076
	.895	22.7330
	.896	22.7584
	.897	22.7838
	.898	22.8092
	.899	22.8346
	.900	22.8600

	Inch	mm
	.901	22.8854
	.902	22.9108
	.903	22.9362
	.904	22.9616
	.905	22.9870
	.9055	23.0000
	.906	23.0124
29/32	.9062	23.0187
	.907	23.0378
	.908	23.0632
	.909	23.0886
	.910	23.1140
	.911	23.1394
	.912	23.1648
	.913	23.1902
	.914	23.2156
	.915	23.2410
	.916	23.2664
	.917	23.2918
	.918	23.3172
	.919	23.3426
	.920	23.3680
	.921	23.3934
59/64	.9219	23.4156
	.922	23.4188
	.923	23.4442
	.924	23.4696
	.925	23.4950
	.926	23.5204
	.927	23.5458
	.928	23.5712
	.929	23.5966
	.930	23.6220
	.931	23.6474
	.932	23.6728
	.933	23.6982
	.934	23.7236
	.935	23.7490
	.936	23.7744
	.937	23.7998
15/16	.9375	23.8125
	.938	23.8252
	.939	23.8506
	.940	23.8760
	.941	23.9014
	.942	23.9268
	.943	23.9522
	.944	23.9776
	.9449	24.0000
	.945	24.0030
	.946	24.0284
	.947	24.0538
	.948	24.0792
	.949	24.1046
	.950	24.1300
	.951	24.1554
	.952	24.1808
	.953	24.2062
61/64	.9531	24.2094
	.954	24.2316
	.955	24.2570
	.956	24.2824
	.957	24.3078
	.958	24.3332
	.959	24.3586
	.960	24.3840
	.961	24.4094
	.962	24.4348
	.963	24.4602
	.964	24.4856
	.965	24.5110
	.966	24.5364
	.967	24.5618
	.968	24.5872
31/32	.9687	24.6062
	.969	24.6126
	.970	24.6380
	.971	24.6634
	.972	24.6888
	.973	24.7142
	.974	24.7396
	.975	24.7650
	.976	24.7904
	.977	24.8158
	.978	24.8412
	.979	24.8666
	.980	24.8920
	.981	24.9174
	.982	24.9428
	.983	24.9682
	.984	24.9936
	.9843	25.0000
63/64	.9844	25.0031
	.985	25.0190
	.986	25.0444
	.987	25.0698
	.988	25.0952
	.989	25.1206
	.990	25.1460
	.991	25.1714
	.992	25.1968
	.993	25.2222
	.994	25.2476
	.995	25.2730
	.996	25.2984
	.997	25.3238
	.998	25.3492
	.999	25.3746
	1.000	25.4000

TONNAGE CHART

APPROXIMATE PRESSURES REQUIRED FOR PUNCHING ROUND HOLES IN MILD STEEL (50,000 P.S.I. YIELD)

HOLE DIAMETER		1/8" .125	3/16" .1875	1/4" .250	5/16" .3125	3/8" .375	7/16" .4375	1/2" .500	9/16" .5625	5/8" .625	11/16" .6875	3/4" .750	13/16" .8125	7/8" .875	15/16" .9375	1" 1.000
Metal Gauge	Thickness Inches	PRESSURE IN TONS														
28	.015	.2	.2	.3	.4	.4	.5	.6	.7	.7	.8	.9	1.0	1.1	1.2	1.3
26	.018	.2	.3	.4	.4	.5	.6	.7	.8	.9	1.0	1.1	1.1	1.2	1.3	1.4
24	.024	.2	.4	.5	.6	.7	.8	.9	1.1	1.2	1.3	1.4	1.5	1.6	1.8	1.9
22	.030	.3	.4	.6	.7	.9	1.0	1.2	1.3	1.5	1.6	1.8	1.9	2.1	2.2	2.4
20	.036	.4	.5	.7	.9	1.1	1.2	1.4	1.6	1.8	1.9	2.1	2.3	2.5	2.6	2.8
18	.048	.5	.7	.9	1.2	1.4	1.6	1.9	2.1	2.4	2.6	2.8	3.1	3.3	3.5	3.8
16	.060	.6	.9	1.2	1.5	1.8	2.1	2.3	2.6	2.9	3.2	3.5	3.8	4.1	4.4	4.7
14	.075	.7	1.1	1.5	1.8	2.2	2.6	2.9	3.3	3.7	4.0	4.4	4.8	5.1	5.5	5.9
12	.105	1.0	1.5	2.1	2.6	3.1	3.6	4.1	4.6	5.1	5.7	6.2	6.7	7.2	7.7	8.2
11	.120	1.2	1.8	2.4	2.9	3.5	4.1	4.7	5.1	5.9	6.2	7.1	7.6	8.3	8.8	9.4
10	.135	1.3	2.0	2.6	3.3	4.0	4.6	5.3	5.9	6.6	7.3	7.9	8.6	9.2	9.9	10.6
5/32"	.157	–	2.3	3.1	3.8	4.6	5.4	6.1	6.9	7.7	8.4	9.2	10.0	10.7	11.5	12.3
3/16"	.188	–	2.8	3.7	4.6	5.5	6.4	7.4	8.3	9.2	10.1	11.0	12.0	12.9	13.8	14.8
1/4"	.250	–	–	4.9	6.1	7.4	8.6	9.8	11.1	12.3	13.5	14.7	16.0	17.2	18.4	19.7
3/8"	.375	–	–	–	–	11.1	12.8	14.8	16.5	18.5	20.2	22.1	23.8	25.8	27.5	29.5
1/2"	.500	–	–	–	–	–	–	19.7	22.0	24.6	26.9	29.5	31.8	34.4	36.8	39.4
5/8"	.625	–	–	–	–	–	–	–	–	30.8	33.7	36.9	39.9	43.0	46.0	49.2
3/4"	.750	–	–	–	–	–	–	–	–	–	–	44.3	47.7	51.7	55.2	59.0
1"	1.000	–	–	–	–	–	–	–	–	–	–	–	–	–	–	80.0

To obtain tonnage required for punching round holes in mild steel – – – – – multiply as follows: –
3.1416 X DIAMETER OF HOLE X MATERIAL THICKNESS X 25 –
PUNCHING PRESSURE REQUIRED FOR ONE HOLE

– TONNAGE CHART –

APPROXIMATE PRESSURES REQUIRED FOR NOTCHING MILD STEEL

METAL THICKNESS	Gauge	20	18	16	14	12	11	10	3/16"	1/4"	3/8"	1/2"	5/8"	3/4"	1"
	Decimal	.036	.048	.060	.075	.105	.120	.135	.187	.250	.375	.500	.625	.750	1.000
TONS REQUIRED TO NOTCH 1" LENGTH		.90	1.20	1.50	1.87	2.63	3.00	3.38	4.68	6.25	9.38	12.5	15.75	18.75	25.00

Formula for notching mild steel based on 25 tons per square inch:
TOTAL SHEAR LENGTH X MATERIAL THICKNESS X 25 = TONNAGE

– MULTIPLIER CHART –

THE MULTIPLES SHOWN OPPOSITE MAY BE USED TO CONVERT THE ABOVE CHART AND FORMULA TO FIND TONNAGE REQUIRED TO NOTCH OTHER MATERIAL.

FOR EXAMPLE: –
IT REQUIRES 1.5 TONS TO NOTCH 1" OF 16-GAUGE MILD STEEL – STAINLESS STEEL (18-8), WOULD REQUIRE 1.5 X 1.4 (MULTIPLIER) OR 2.1 TONS.

MATERIAL DESCRIPTION	TONS PER SQ. IN.	YIELD or SHEAR STRENGTH PER SQ. IN.	MULTIPLIER
Aluminium - Soft Sheet	7½	15,000 P.S.I.	.30
Aluminium - Half Hard	9½	19,000 P.S.I.	.38
Aluminium - Hard	12	25,000 P.S.I.	.50
Brass - Soft Sheet	15	30,000 P.S.I.	.60
Brass - Half Hard	17½	35,000 P.S.I.	.70
Copper - Rolled	14	28,000 P.S.I.	.57
Steel - Mild	25	50,000 P.S.I.	1.00
Steel - ASTM-A36	30	60,000 P.S.I.	1.20
Steel - 50 Carbon	35	70,000 P.S.I.	1.40
Steel - Cold Drawn	30	60,000 P.S.I.	1.20
Steel - Stainless (18-8)	35	70,000 P.S.I.	1.40

DISTANCE ACROSS CORNERS OF HEXAGONS AND SQUARES

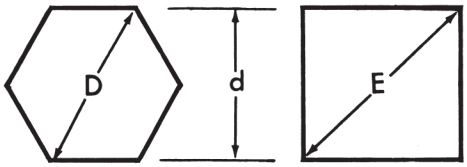

D=1.1547d E=1.4142d

d	D	E	d	D	E	d	D	E
1/4	0.2886	0.3535	1-1/4	1.4434	1.7677	2-5/16	2.6702	3.2703
9/32	0.3247	0.3977	1-9/32	1.4794	1.8119	2-3/8	2.7424	3.3587
5/16	0.3608	0.4419	1-5/16	1.5155	1.8561	2-7/16	2.8145	3.4471
11/32	0.3968	0.4861	1-11/32	1.5516	1.9003	2-1/2	2.8867	3.5355
3/8	0.4329	0.5303	1-3/8	1.5877	1.9445	2-9/16	2.9583	3.6239
13/32	0.4690	0.5745	1-13/32	1.6238	1.9887	2-5/8	3.0311	3.7123
7/16	0.5051	0.6187	1-7/16	1.6598	2.0329	2-11/16	3.1032	3.8007
15/32	0.5412	0.6629	1-15/32	1.6959	2.0771	2-3/4	3.1754	3.8891
1/2	0.5773	0.7071	1-1/2	1.7320	2.1213	2-13/16	3.2476	3.9794
17/32	0.6133	0.7513	1-17/32	1.7681	2.1655	2-7/8	3.3197	4.0658
9/16	0.6494	0.7955	1-9/16	1.8042	2.2097	2-15/16	3.3919	4.1542
19/32	0.6855	0.8397	1-19/32	1.8403	2.2539	3	3.4641	4.2426
5/8	0.7216	0.8839	1-5/8	1.8764	2.2981	3-1/16	3.5362	4.3310
21/32	0.7576	0.9281	1-21/32	1.9124	2.3423	3-1/8	3.6084	4.4194
11/16	0.7937	0.9723	1-11/16	1.9485	2.3865	3-3/16	3.6806	4.5078
23/32	0.8298	1.0164	1-23/32	1.9846	2.4306	3-1/4	3.7527	4.5962
3/4	0.8659	1.0606	1-3/4	2.0207	2.4708	3-5/16	3.8249	4.6846
25/32	0.9020	1.1048	1-25/32	2.0568	2.5190	3-3/8	3.8971	4.7729
13/16	0.9380	1.1490	1-13/16	2.0929	2.5632	3-7/16	3.9692	4.8613
27/32	0.9741	1.1932	1-27/32	2.1289	2.6074	3-1/2	4.0414	4.9497
7/8	1.0102	1.2374	1-7/8	2.1650	2.6516	3-9/16	4.1136	5.0381
29/32	1.0463	1.2816	1-29/32	2.2011	2.6958	3-5/8	4.1857	5.1265
15/16	1.0824	1.3258	1-15/16	2.2372	2.7400	3-11/16	4.2579	5.2149
31/32	1.1184	1.3700	1-31/32	2.2733	2.7842	3-3/4	4.3301	5.3033
1	1.1547	1.4142	2	2.3094	2.8284	3-13/16	4.4023	5.3917
1-1/32	1.1907	1.4584	2-1/32	2.3453	2.8726	3-7/8	4.4744	5.4801
1-1/16	1.2268	1.5026	2-1/16	2.3815	2.9168	3-15/16	4.5446	5.5684
1-3/32	1.2629	1.5468	2-3/32	2.4176	2.9610	4	4.6188	5.6568
1-1/8	1.2990	1.5910	2-1/8	2.4537	3.0052	4-1/8	4.7631	5.8336
1-5/32	1.3351	1.6352	2-5/32	2.4898	3.0494	4-1/4	4.9074	6.0104
1-3/16	1.3712	1.6793	2-3/16	2.5259	3.0936	4-3/8	5.0518	6.1872
1-7/32	1.4073	1.7235	2-1/4	2.5981	3.1820	4-1/2	5.1961	6.3639

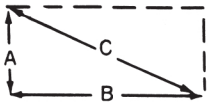

FORMULA FOR ESTABLISHING C DIMENSION OF RECTANGLE

$$C = \sqrt{A^2 + B^2}$$

DISTANCE ACROSS CORNERS OF SQUARES AND RECTANGLES

	1/8	5/32	3/16	7/32	1/4	9/32	5/16	11/32	3/8	13/32	7/16	15/32	1/2	17/32	9/16	19/32	5/8	21/32	11/16	23/32	3/4	25/32	13/16	27/32	7/8	29/32	15/16	31/32	1"
1/8	.1767	.2001	.2253	.2519	.2795	.3077	.3365	.3657	.3953	.4250	.4550	.4851	.5153	.5457	.5762	.6067	.6373	.6680	.6987	.7295	.7603	.7911	.8220	.8529	.8839	.9148	.9458	.9768	1.0078
5/32	.2001	.2209	.2440	.2689	.2948	.3217	.3494	.3775	.4062	.4352	.4645	.4941	.5240	.5537	.5838	.6139	.6442	.6746	.7050	.7355	.7661	.7967	.8274	.8581	.8888	.9196	.9504	.9812	1.0121
3/16	.2253	.2440	.2651	.2881	.3125	.3378	.3644	.3914	.4192	.4474	.4759	.5048	.5340	.5633	.5929	.6226	.6525	.6825	.7126	.7428	.7731	.8034	.8339	.8643	.8948	.9254	.9560	.9867	1.0174
7/32	.2519	.2689	.2881	.3093	.3322	.3563	.3814	.4074	.4340	.4614	.4891	.5172	.5458	.5745	.6035	.6327	.6622	.6918	.7215	.7513	.7812	.8113	.8414	.8716	.9019	.9323	.9627	.9931	1.0236
1/4	.2795	.2948	.3125	.3322	.3535	.3763	.4001	.4250	.4507	.4770	.5035	.5312	.5591	.5871	.6155	.6442	.6731	.7022	.7315	.7610	.7906	.8203	.8501	.8800	.9100	.9401	.9703	1.0000	1.0307
9/32	.3077	.3217	.3378	.3563	.3763	.3977	.4204	.4441	.4687	.4941	.5201	.5467	.5737	.6011	.6289	.6570	.6853	.7140	.7428	.7718	.8010	.8303	.8598	.8894	.9191	.9488	.9788	1.0087	1.0387
5/16	.3365	.3494	.3644	.3814	.4011	.4204	.4419	.4645	.4881	.5125	.5376	.5633	.5897	.6163	.6434	.6709	.6987	.7268	.7552	.7837	.8125	.8414	.8705	.8997	.9291	.9586	.9882	1.0179	1.0477
11/32	.3657	.3775	.3914	.4074	.4250	.4441	.4645	.4861	.5087	.5321	.5564	.5812	.6067	.6327	.6592	.6861	.7133	.7408	.7686	.7967	.8250	.8535	.8822	.9111	.9401	.9692	.9985	1.0279	1.0574
3/8	.3953	.4062	.4192	.4340	.4507	.4687	.4881	.5087	.5303	.5528	.5762	.6003	.6250	.6503	.6760	.7022	.7288	.7558	.7831	.8107	.8385	.8666	.8948	.9233	.9519	.9808	1.0097	1.0387	1.0680
13/32	.4250	.4352	.4474	.4614	.4770	.4941	.5125	.5321	.5528	.5745	.5970	.6203	.6442	.6688	.6938	.7194	.7454	.7718	.7985	.8256	.8529	.8805	.9084	.9364	.9647	.9931	1.0217	1.0505	1.0794
7/16	.4550	.4645	.4759	.4891	.5035	.5201	.5376	.5564	.5762	.5970	.6187	.6411	.6644	.6882	.7126	.7375	.7629	.7887	.8139	.8414	.8682	.8954	.9228	.9504	.9783	1.0063	1.0345	1.0629	1.0915
15/32	.4851	.4941	.5048	.5172	.5312	.5467	.5633	.5812	.6003	.6203	.6412	.6629	.6854	.7085	.7322	.7565	.7812	.8064	.8321	.8581	.8844	.9111	.9380	.9652	.9926	1.0203	1.0481	1.0762	1.1044
1/2	.5153	.5240	.5340	.5458	.5591	.5737	.5897	.6067	.6250	.6442	.6644	.6854	.7071	.7295	.7526	.7763	.8004	.8250	.8501	.8756	.9014	.9275	.9540	.9808	1.0077	1.0350	1.0625	1.0902	1.1180
17/32														.7513	.7737	.7967	.8203	.8443	.8688	.8938	.9191	.9447	.9707	.9971	1.0236	1.0505	1.0775	1.1048	1.1323
9/16														.7737	.7955	.8179	.8408	.8643	.8883	.9127	.9375	.9627	.9882	1.0141	1.0402	1.0666	1.0933	1.1202	1.1473
19/32														.7969	.8179	.8397	.8620	.8850	.9084	.9323	.9566	.9813	1.0063	1.0317	1.0574	1.0834	1.1097	1.1362	1.1630
5/8														.8203	.8408	.8620	.8839	.9062	.9291	.9525	.9763	1.0005	1.0251	1.0500	1.0753	1.1009	1.1267	1.1529	1.1792
21/32														.8443	.8643	.8850	.9062	.9281	.9504	.9733	.9965	1.0203	1.0444	1.0689	1.0937	1.1189	1.1443	1.1701	1.1961
11/16														.8688	.8883	.9084	.9291	.9504	.9723	.9946	1.0174	1.0407	1.0643	1.0884	1.1128	1.1375	1.1625	1.1879	1.2135
23/32														.8938	.9127	.9323	.9525	.9733	.9946	1.0164	1.0388	1.0616	1.0849	1.1084	1.1324	1.1566	1.1813	1.2062	1.2315
3/4														.9191	.9375	.9566	.9763	.9965	1.0174	1.0388	1.0606	1.0829	1.1057	1.1289	1.1524	1.1763	1.2006	1.2251	1.2500
25/32														.9447	.9627	.9813	1.0005	1.0203	1.0407	1.0616	1.0829	1.1048	1.1271	1.1499	1.1730	1.1965	1.2203	1.2445	1.2690
13/16														.9707	.9882	1.0063	1.0251	1.0444	1.0643	1.0848	1.1057	1.1271	1.1490	1.1713	1.1941	1.2171	1.2406	1.2644	1.2884
27/32														.9971	1.0141	1.0317	1.0500	1.0689	1.0884	1.1084	1.1289	1.1499	1.1713	1.1932	1.2155	1.2382	1.2613	1.2847	1.3084
7/8														1.0236	1.0402	1.0574	1.0753	1.0937	1.1128	1.1324	1.1524	1.1730	1.1941	1.2155	1.2374	1.2597	1.2824	1.3054	1.3287
29/32														1.0505	1.0666	1.0834	1.0009	1.1189	1.1375	1.1566	1.1763	1.1965	1.2171	1.2382	1.2597	1.2816	1.3039	1.3265	1.3495
15/16														1.0775	1.0933	1.1097	1.1267	1.1443	1.1625	1.1813	1.2006	1.2203	1.2406	1.2613	1.2854	1.3039	1.3258	1.3481	1.3707
31/32														1.1048	1.1202	1.1362	1.1529	1.1701	1.1879	1.2062	1.2251	1.2445	1.2644	1.2847	1.3054	1.3265	1.3481	1.3700	1.3923
1"														1.1323	1.1473	1.1630	1.1792	1.1961	1.2135	1.2315	1.2500	1.2690	1.2884	1.3084	1.3287	1.3495	1.3707	1.3923	1.4142

APPROXIMATE SHIPPING WEIGHTS

HEAVY DUTY "C" FRAME UNITS

MODEL H	Wt. in Lbs.
4H-1	9
8H-1	11
12H-1	15
4H-1 1/4	12
8H-1 1/4	14
12H-1 1/4	17
4H-1 1/2	15
8H-1 1/2	18
12H-1 1/2	21
18H-1 1/2	26
24H-1 1/2	32
4H-2	20
8H-2	24
12H-2	28
18H-2	34
24H-2	40
4H-2 1/2	29
8H-2 1/2	35
12H-2 1/2	44
18H-2 1/2	53
24H-2 1/2	62
8H-3	36
12H-3	46
18H-3	60
8H-3 1/2	61
12H-3 1/2	72
18H-3 1/2	88
24H-3 1/2	106
8H-5 3/4	119
12H-5 3/4	135
18H-5 3/4	159
24H-5 3/4	186
14H-8	180
18H-8	205
24H-8	245

MODEL HH	Wt. in Lbs.
8HH-2 1/2	31
12HH-2 1/2	40
18HH-2 1/2	51
8HH-3	32
12HH-3	44
18HH-3	65

MODEL HP	Wt. in Lbs.
4HP-1	9
8HP-1	11
12HP-1	15
4HP-1 1/4	12
8HP-1 1/4	14
12HP-1 1/4	17
4HP-1 1/2	15
8HP-1 1/2	18
12HP-1 1/2	21
18HP-1 1/2	26
24HP-1 1/2	32
4HP-2	20
8HP-2	24
12HP-2	28
18HP-2	34
24HP-2	40
4HP-2 1/2	21
8HP-2 1/2	28
12HP-2 1/2	39

MODEL HA	Wt. in Lbs.
4HA-1	9
8HA-1	11
12HA-1	15
4HA-1 1/4	12
8HA-1 1/4	14
12HA-1 1/4	17
4HA-1 1/2	15
8HA-1 1/2	18
12HA-1 1/2	21
18HA-1 1/2	26
24HA-1 1/2	32
4HA-2	20
8HA-2	24
12HA-2	28
18HA-2	34
24HA-2	40

MODEL HH	Wt. in Lbs.
8HH-3 1/2	53
12HH-3 1/2	65
18HH-3 1/2	72
8HH-5 1/2	83
12HH-5 1/2	110
18HH-5 1/2	145

MEDIUM DUTY "C" FRAME UNITS

MODEL M	Wt. in Lbs.
4M-3/4	5
8M-3/4	7
4M-1	7
8M-1	10
4M-1 1/4	9
8M-1 1/4	12
12M-1 1/4	15
4M-1 3/4	15
8M-1 3/4	18
12M-1 3/4	22
18M-1 3/4	26
24M-1 3/4	32
4M-2 1/4	19
8M-2 1/4	24
12M-2 1/4	29
18M-2 1/4	37
24M-2 1/4	46
4M-2 1/2	21
8M-2 1/2	26
12M-2 1/2	31
18M-2 1/2	41
24M-2 1/2	50
4M-3	23
8M-3	29
12M-3	36
18M-3	47
24M-3	59
10M-4	33
14M-4	42
18M-4	50
24M-4	63
14M-5	45
18M-5	53
24M-5	68
14M-8	135
18M-8	145
24M-8	160

HEAVY DUTY NOTCHERS

MODEL	Wt. in Lbs.
SERIES 100	
H33-LCN	65
H33-RCN	65
H55-LCN	105
H55-RCN	105
HV-1	34
HV1 1/2	41
SERIES 200	
HNC-33	59
HNC-55	96
HNC-66	120
HNE-33	70
HNE-55	117

MEDIUM DUTY NOTCHERS

SERIES 100	
M33-LCN	38
M33-RCN	38
M55-LCN	54
M55-RCN	54
MV-1	16
MV-1 1/2	23
SERIES 200	
MNC-33	35
MNC-55	56
MNC-66	76
MNC-88	95

MISCELLANEOUS UNITS

L-SERIES-3/4	4
HCP-2	15
HCP-2 1/2	26
TP-2	20
HZP-3/4	4
HZP-1 1/4	21
HZP-1 1/2	25
HZP2	32